PRODUCT INFORMATION PACKET

Model No: 145TTDR6026
Catalog No: E928
General Purpose Motor, 1.50 & 1 HP, 3 Ph, 60 & 50 Hz, 208-230/460 & 190/380 V, 1800 & 1500 RPM, 145T Frame, DP

Regal and Marathon are trademarks of Regal Rexnord Corporation or one of its affiliated companies.
©2024 Regal Rexnord Corporation, All Rights Reserved. MC017097E

Nameplate Specifications

Phase	3	Output HP	1.50 & 1 Hp
Output KW	1.1 & 0.75 kW	Voltage	208-230/460 & 190/380 V
Speed	1740 & 1445 rpm	Service Factor	1.15 & 1.15
Frame	145T	Enclosure	Drip Proof
Thermal Protection	No Protection	Efficiency	85.5 & 84 %
Ambient Temperature	40 °C	Frequency	60 & 50 Hz
Current	4.6-4.2/2.1 & 3.6/1.8 A	Power Factor	78.5
Duty	Continuous	Insulation Class	F
Design Code	B	KVA Code	M
Drive End Bearing Size	6205	Opp Drive End Bearing Size	6203
UL	Recognized	CSA	Y
CE	Y	IP Code	22
Number of Speeds	1		

Technical Specifications

Electrical Type	Squirrel Cage Inverter Rated	Starting Method	Line Or Inverter
Poles	4	Rotation	Reversible
Resistance Main	9.88 Ohms	Mounting	Rigid Base
Motor Orientation	Horizontal	Drive End Bearing	Ball
Opp Drive End Bearing	Ball	Frame Material	Rolled Steel
Shaft Type	T	Overall Length	12.49 in
Frame Length	8.56 in	Shaft Diameter	0.880 in
Shaft Extension	2.28 in	Assembly/Box Mounting	F1 ONLY
Inverter Load	CONSTANT 10:1		
Outline Drawing	A-100085-856	Connection Drawing	A-EE7308

This is an uncontrolled document once printed or downloaded and is subject to change without notice. Date Created:02/19/2024

Uncontrolled Copy

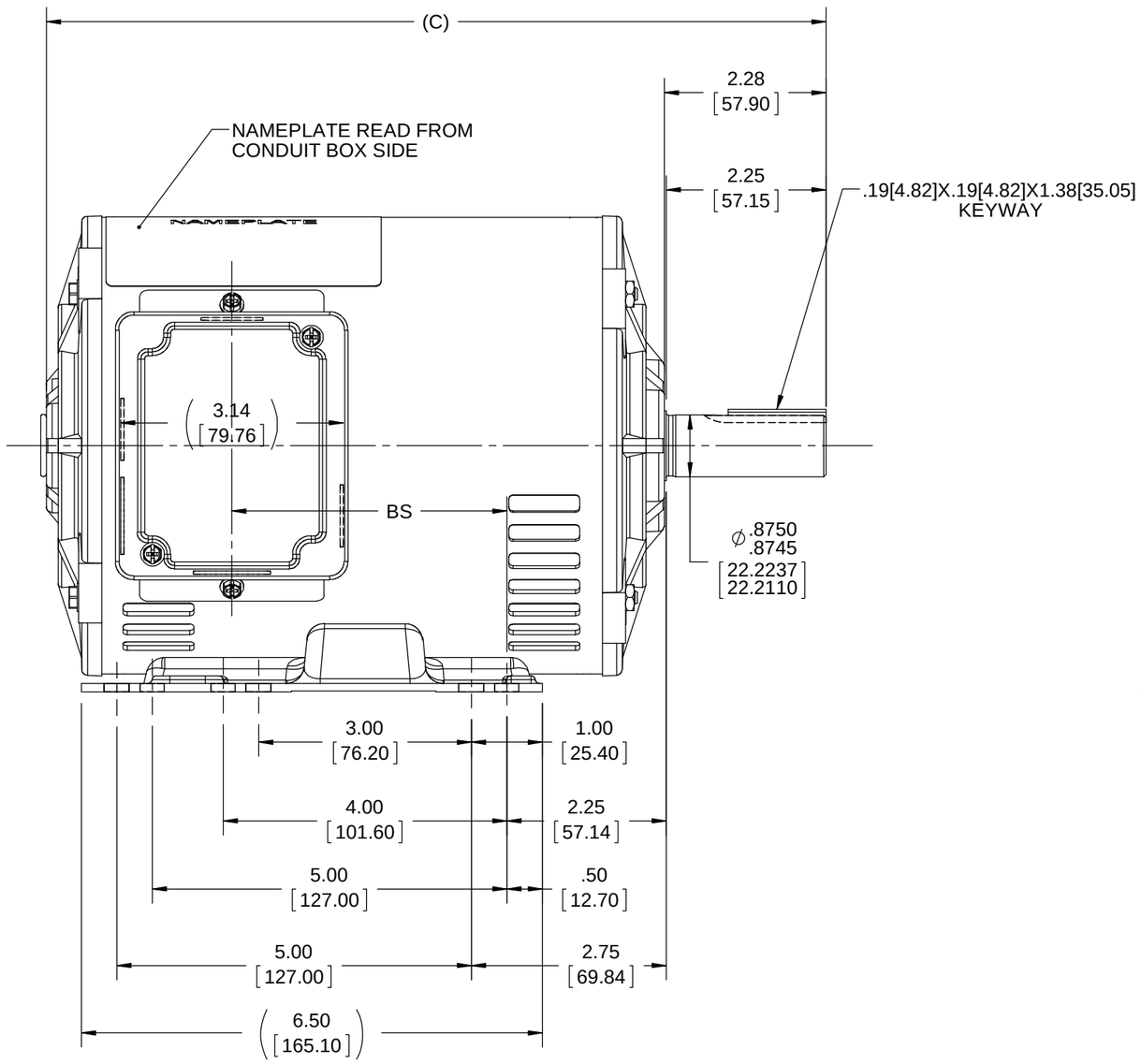

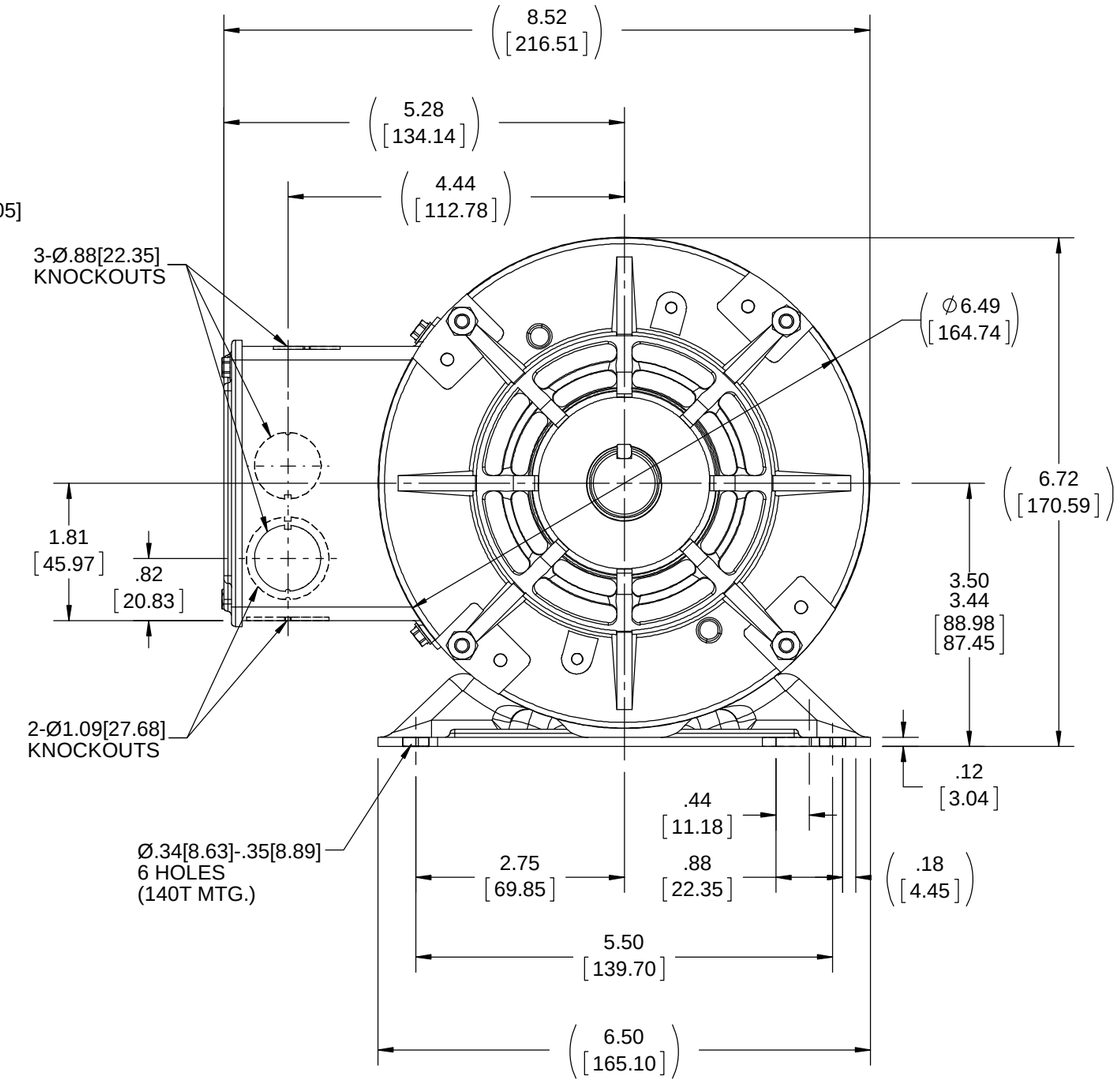

NOTES:

1.CONDUIT BOX CAN BE ROTATED 180°.

DASH NO.	"C"	"BS"
706	10.99[279.14]	3.87[98.29]
756	11.49[291.84]	4.37[110.99]
806	11.99[304.54]	4.87[123.69]
856	12.49[317.24]	5.37[136.39]
906	12.99[329.94]	5.87[149.09]
956	13.49[342.64]	6.37[161.79]

DRAWING REVISION	REVISION BY	DATE
E	A. KEETHA	01-09-2018
ECO: ECO-0143026	APPROVED BY: PST	DATE: 04/11/2018

ECO DESCRIPTION: OUTLINE CONVERSION PROJECT

COPYRIGHT REGAL BELOIT AMERICA, INC. ALL RIGHTS RESERVED.
PROPRIETARY AND CONFIDENTIAL INFORMATION - THIS DOCUMENT IS THE PROPERTY OF REGAL BELOIT AMERICA, INC. ("OWNER") AND CONTAINS OWNER'S PROPRIETARY INFORMATION. ANY PERSON, CORPORATION OR OTHER FIRM RECEIVING IT IS DEEMED, BY RECEIVING IT, TO AGREE THAT IT, AND/OR ANY PART OF IT, SHALL NOT BE DISCLOSED TO ANY PERSON, CORPORATION OR OTHER ENTITY, DUPLICATED, AND/OR USED, EXCEPT AS EXPRESSLY APPROVED IN WRITING IN ADVANCE BY OWNER. THIS DOCUMENT SHALL BE RETURNED TO OWNER UPON REQUEST. IT MAY BE SUBJECT TO CERTAIN RESTRICTIONS UNDER APPLICABLE EXPORT CONTROL LAWS AND REGULATIONS.

TOLERANCES UNLESS OTHERWISE SPECIFIED:

DEC.	INCH	mm	ANGLE
.X	±0.1	[±2.5]	±7' 30"
.XX	±0.03	[±0.76]	
.XXX	±0.005	[±0.127]	
.XXXX	±0.0005	[±0.0127]	

REMOVE BURRS & BREAK SHARP EDGES: .003/.015 [.076/.381] X 45 °
CORNER FILLETS: R.02 [.51]
MACHINED SURFACES: 200 INCH / 5.1 mm
mm SHOWN IN [BRACKETS]

DRAWN BY	GK
DATE	02-04-1988
APPROVED BY	FG
DATE	02-04-1998
REFERENCE	100085
THIRD ANGLE PROJECTION	

REGAL™ Regal Beloit America, Inc.

DESCRIPTION: OUTLINE
140T & 56HZ - DR.PR.

MATERIAL | PROCESS/FINISH

SIZE: B | DRAWING NUMBER: 100085 | SHEET: 1 OF 1

Uncontrolled Copy

EE7308

THREE PHASE DUAL VOLTAGE MOTOR

HIGH VOLTAGE

(U1) T1 — L1
(V1) T2 — L2
(W1) T3 — L3
(U2) T4
(U3) T7
(V2) T5
(V3) T8
(W2) T6
(W3) T9

LOW VOLTAGE

(U1) T1
(U3) T7 — L1
(V1) T2
(V3) T8 — L2
(W1) T3
(W3) T9 — L3
(U2) T4
(V2) T5
(W2) T6

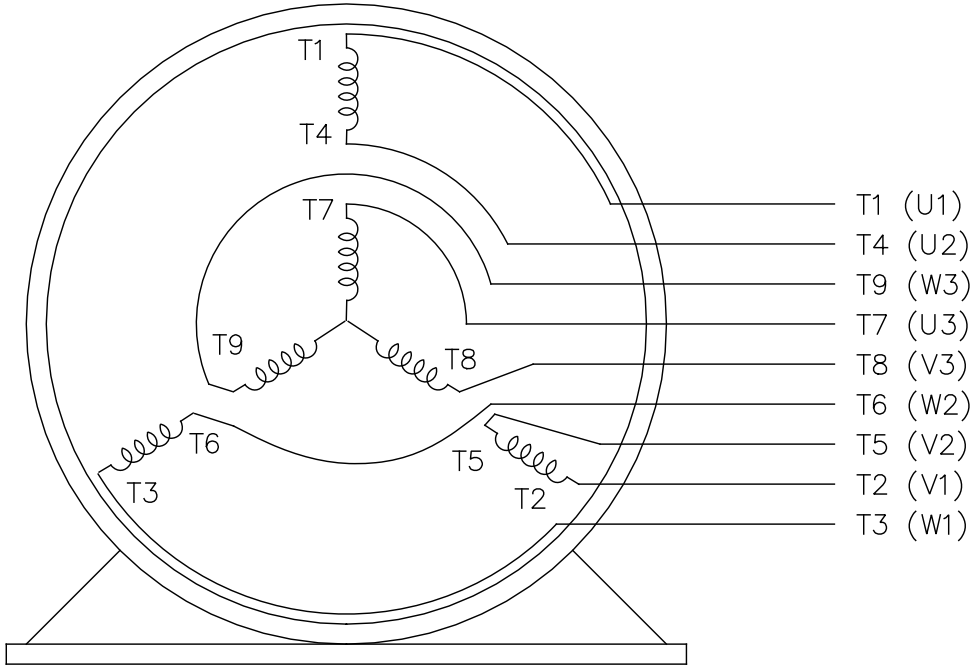

VIEW OF TERMINAL END

REF.
WINDING DIAGRAM

T8Y, T2Y, T2BL, T4BX, T2EC, T2G
T6BZ, T2B, T6BL, T4AV, T6B, T4B

OPTIONAL CORD CONNECTION

L1 — WHITE
L2 — RED
L3 — BLACK

NO.	REVISION	BY & DATE	CHK
5	CHG TO REGAL LOGO	SL 09/10/2015	AB
4	REVISED IEC NOTATIONS	MSG 11/15/2011	CMN
3	ADDED IEC NOTATIONS... (U1), (V1) ETC. MU95194	MSG 5/10/2010	MJS
2	ADDED THE OPTIONAL CORD CONNECTION MU46318	RDH 04/24/2003	DRS
1	REDRAWN	RM 11/20/1990	

TOLERANCES UNLESS SPECIFIED

DEC.	INCHES
.X	±.1
.XX	±.02
.XXX	±.005
.XXXX	±.0005
ANG	±7'30"

REGAL™ Regal Beloit America, Inc.

TITLE CONNECTION DIAGRAM
3ø – DUAL VOLTAGE MOTOR

MAT'L.
FINISH

DRAWN	RM	11/20/1990
CHK	ML	11/21/1990
APPD	SAS	04/24/2003
SCALE	1=1	
REF		
FMF		
PREV		

THIS DRAWING IN DESIGN AND DETAIL IS OUR PROPERTY AND MUST NOT BE USED EXCEPT IN CONNECTION WITH OUR WORK ALL RIGHTS OF DESIGN AND INVENTION ARE RESERVED
THIS IS AN ELECTRONICALLY GENERATED DOCUMENT – DO NOT SCALE THIS PRINT

RFP
DIST WP
CAD FILE ee7308
SIZE A
DRAWING NO. EE7308 PAGE OF
REV. 5

Uncontrolled Copy

CERTIFICATION DATA SHEET

Model#:	145TTDR6026 DA	**WINDING#:**	ZT4105 DR 3
CONN. DIAGRAM:	A-EE7308	**ASSEMBLY:**	F1 ONLY
OUTLINE:	A-100085-856		

TYPICAL MOTOR PERFORMANCE DATA

HP	KW	SYNC. RPM	F.L. RPM	FRAME	ENCLOSURE	KVA CODE	DESIGN
1 1/2&1	1.12&.75	1800	1740&1445	145T	DP	M	B

PH	Hz	VOLTS	FL AMPS	START TYPE	DUTY	INSL	S.F	AMB°C	ELEVATION
3	60/50	208-230/460#190/380	4.6-4.2/2.1&3.6/1.8	LINE OR INVERTER	CONTINUOUS	F3	1.15/1.15	40	3300

FULL LOAD EFF: 85.5&84	3/4 LOAD EFF: 85.5	1/2 LOAD EFF: 82.5	GTD. EFF	ELEC. TYPE	NO LOAD AMPS
FULL LOAD PF: 78.5&76	**3/4 LOAD PF: 72**	**1/2 LOAD PF: 60**	82.5	SQ CAGE INV RATED	2.2 / 1.1

F.L. TORQUE	LOCKED ROTOR AMPS	L.R. TORQUE	B.D. TORQUE	F.L. RISE°C
4.5 LB-FT	35 / 17.5	16 LB-FT 356	18.5 LB-FT 411	33

SOUND PRESSURE @ 3 FT.	SOUND POWER	ROTOR WK^2	MAX. WK^2	SAFE STALL TIME	STARTS /HOUR	APPROX. MOTOR WGT
56 dBA	66 dBA	0.11 LB-FT^2	10 LB-FT^2	20 SEC.	2	45 LBS.

*** SUPPLEMENTAL INFORMATION ***

DE BRACKET TYPE	ODE BRACKET TYPE	MOUNT TYPE	ORIENTATION	SEVERE DUTY	HAZARDOUS LOCATION	DRIP COVER	SCREENS	PAINT
STANDARD	STANDARD	RIGID	HORIZONTAL	FALSE	NONE	FALSE	NONE	BLUE (POWDER)

BEARINGS		GREASE	SHAFT TYPE	SPECIAL DE	SPECIAL ODE	SHAFT MATERIAL	FRAME MATERIAL
DE	OPE						
BALL	BALL	POLYREX EM	T	NONE	NONE	1144 STRESSPROOF (C-223)	ROLLED STEEL
6205	6203						

THERMO-PROTECTORS				THERMISTORS	CONTROL	SPACE /n HEATERS
THERMOSTATS	PROTECTORS	WDG RTDs	BRG RTDs			
NONE	NOT	NONE	NONE	NONE	FALSE	NONE VOLTS

If Inverter equals NONE, contact factory for further information

INVERTER TORQUE: CONSTANT 10:1
INV. HP SPEED RANGE: 1.5 X BASE SPEED

ENCODER: NONE
NONE NONE
NONE NONE PPR

BRAKE: NONE NONE
NONE P/N NONE
NONE NONE
NONE FT-LB NONE V NONE Hz

*
N
O
T
E
S
*

DATE: 06/23/2017 06:48:21 AM
FORM 3531 REV.3 02/07/99

Uncontrolled Copy

** Subject to change without notice.

Uncontrolled Copy

Data Sheet

Date: 12/14/2018
Customer:
Attention:
Submitted by: FAREEDA DUDEKULA

marathon electric

145TTDR6026

Submittal

Data @ 460 V

Motor Load Data

Load	0%	25%	50%	75%	100%	115%	125%	LR	
Current (Amps)	1.10	1.20	1.40	1.60	2.10	2.30	2.50	17.5	
Torque (ft-lb)	0.00	1.10	2.20	3.4	4.5	5.2	5.7	16.0	
RPM	1800	1785	1770	1755	1740	1,735	1720	0	
Efficiency (%)		75.0	82.5	85.5	85.5	85.5	84.0		
P.F. (%)	10.0	40.5	60.0	72.0	78.5	80.0	83.0	68.5	

Motor Speed Data

	LR	Pull-Up	BD	Rated	Idle
Speed (RPM)	0	400	1180	1740	1800
Current (Amps)	17.5	16.5	12.5	2.10	1.10
Torque (ft-lb)	16.0	14.5	18.5	4.5	0.00

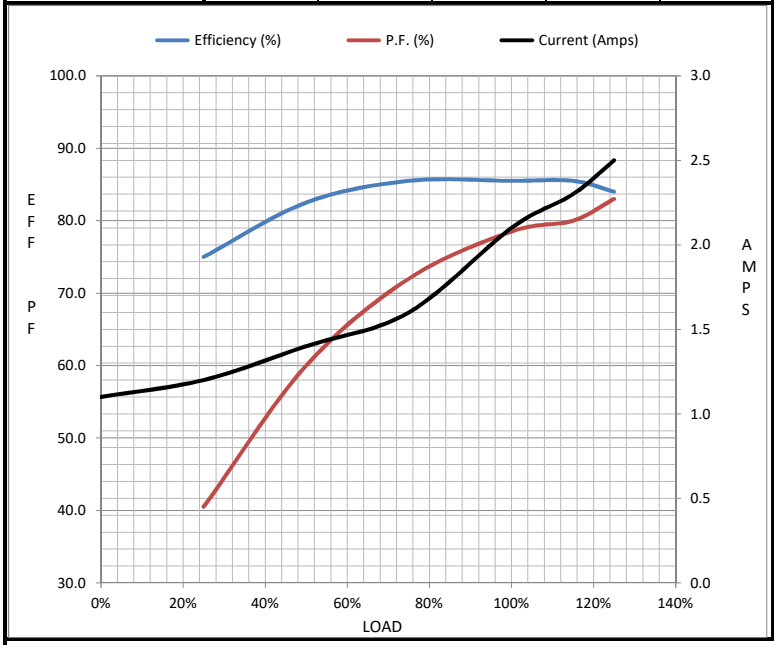

Information Block

HP	1.5	
Sync. RPM	1800	
Frame	145	
Enclosure	DP	
Construction	TDR	
Voltage	208-230/460#190/380	V
Frequency	60	Hz
Design	B	
LR Code letter	M	
Service Factor	1.15	
Temp Rise @ FL	33	° C
Duty	CONT	
Ambient	40	° C
Elevation	1,000	feet
Rotor/Shaft wk²	0.11	Lb-Ft²
Ref Wdg	ZT4105 DR	
Sound Pressure @ 1M	56	dBA
VFD Rating	CONSTANT 10:1	
Outline Dwg	A-100085-856	
Conn. Diag	A-EE7308	
Additional Specifications:		
0		
0		

EQUIV CKT (OHMS / PHASE)

R1	R2	X1	X2	Xm
6.2250	4.4080	8.3630	4.4270	202.4440

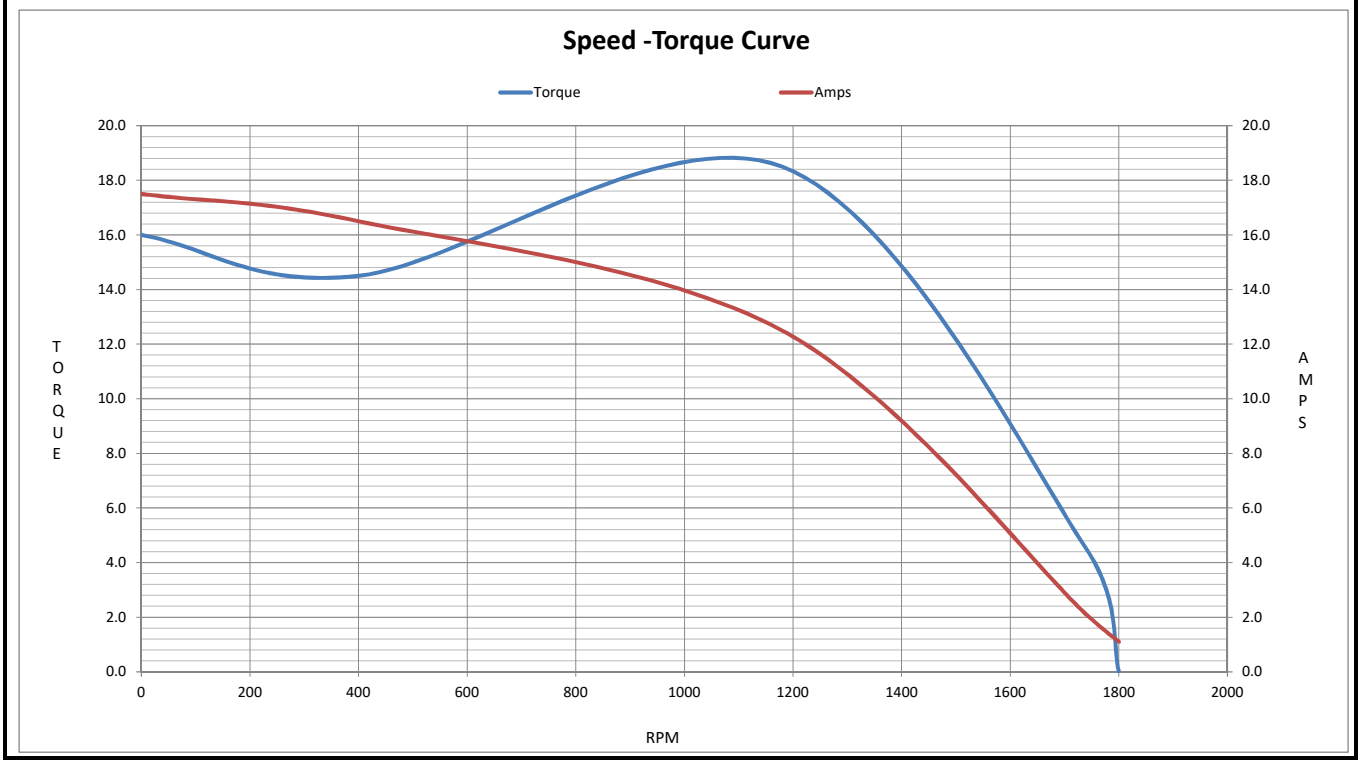

EC Declaration of Conformity

The undersigned representing
the manufacturer:

Regal Beloit America
100 East Randolph St.
Wausau, WI 54401

and the authorized representative
established within the Community:

Marathon Electric UK
6F Thistleton Road Ind. Estate
Market Overton
Oakham, Rutland LE15 7PP UK

are committed to providing customers with products that comply with applicable regulations and international protocols to which they are subject, including the requirements of the European Parliament Directive on the Harmonization of the laws relating to electrical equipment designed for use within certain voltage limits (2014/35/EU).

Regal Beloit America declares that the following product(s), to which this declaration relates, are in conformity with the relevant sections of the EC standards listed below.

This statement supersedes any statements previously issued pertaining to the product(s) listed below and is subject to change without notice.

Model No : 145TTDR6026

(Model No. may contain prefix and/or suffix characters)

Catalog No : E928

Rework No : N/A

Directives :

Low Voltage Directive 2014/35/EU

Harmonized Standards Used :

EN 60034-1: 2010 (IEC 60034-1: 2010)
EN 60034-5: 2001/A1:2007 (IEC 60034-5: 2000/A1:2006)

Authorized Representative:

Michael A. Logsdon
Vice President, Technology

Authorized Representative in the Community:

Julian Clark
Marketing Engineer

Created on 09/06/2022

CE 22